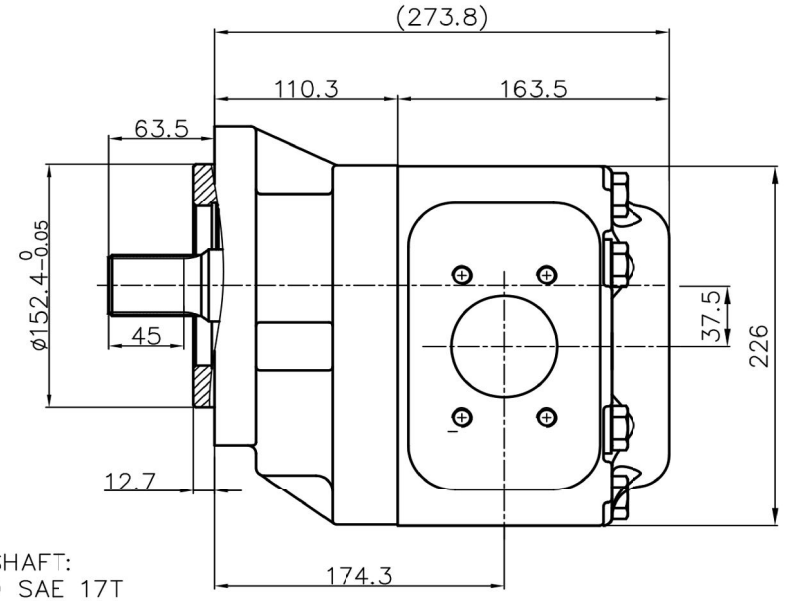

DRIVE SHAFT:
SPLINED SAE 17T
DP: 12/24 PRESSURE ANGLE: 30°
ANSI B92.1

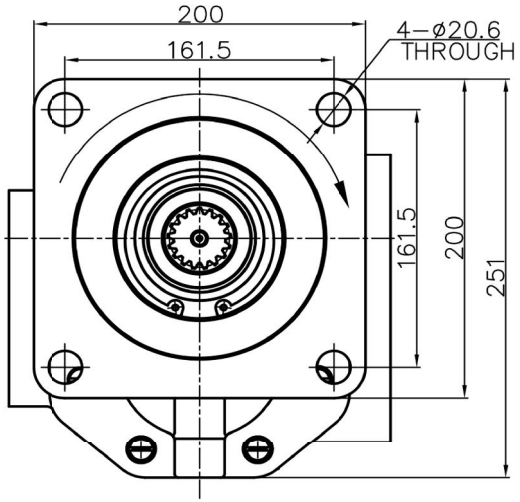

SAE D-4 BOLT

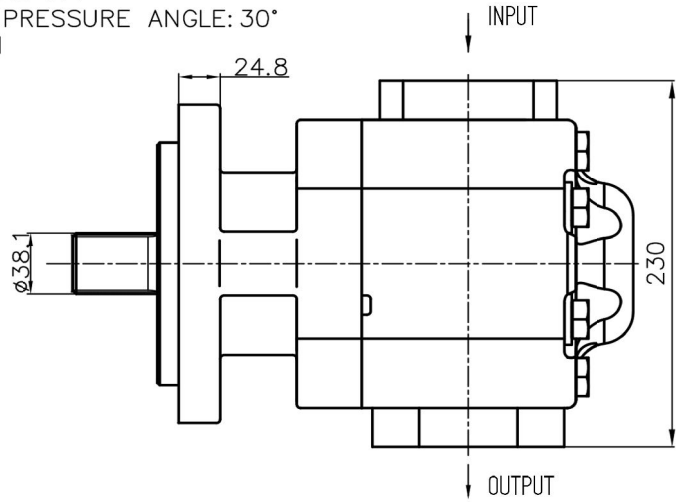

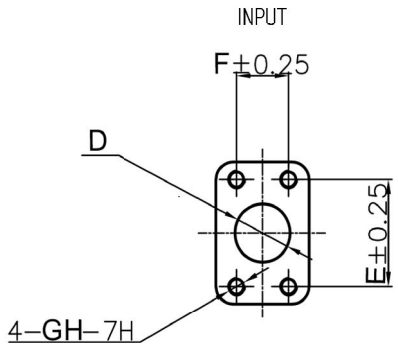

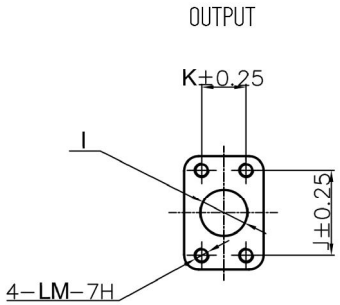

5. AMBIENT TEMPERATURE RANGE: -40 až +55 °C
4. OPERATING TEMPERATUE RANGE:MIN. -20°C; CONTINUOUS 0 - 80°C; INTERMITTENT 100°C
3. FLANGE AND SHAFT ARE PRESERVING BY OIL.
2. ROTATION WAY IS GIVEN IN THE LOOK AT THE FREE SHAFT END – THE PUMP CAN BE USED IN GIVEN ROTATION ONLY.
1. THE CLOCKWISE PUMP IS DRAWN.

DISPLACEMENT [cm³]	ROTATION [-]	SPEED RATE [min⁻¹]	MAX. CONT. PRESSURE [bar]	A	A1	B	(C)	ØD	E	F	G	H	ØI	J	K	L	M	TYPE (DRAWING NUMBER)	PURCHASE CODE
250	CLOCKWISE	600 - 2200	230	-	-	-	-	76,2	106,4	61,9	M16	30	50,8	77,8	42,9	M12	25	GPHD5-250R-S07D29-SE08E06-N	

DIMENSION [mm]

Delivery method: ISO-E				Index changes	Number changes	Date	Signature	Version number: 001	Order number: SEE THE TABLE										
General parameters surface roughness Ra [µm]	Unit: [mm]	Prepared by: M. Simonov	Date: 25.01.2016	Hydrodrive Ltd.															
unmarked edges max. curvature R0,2 (0,2x45°)		approved by	Date																
General tolerance according to CSN ISO 2768. Accuracy class		Material designation	Drawn number	Name: GEAR PUMP															
		Number of semi-finished product																	
Length dimensions according to CSN ISO 2768 c.d		Weight (kg)	Scale: 1X	Product Type	Drawing number: SEE THE TABLE TYPE														
> 0,5 - ≤ 3	> 3 - ≤ 6	> 6 - ≤ 30	> 30 - ≤ 120	> 120 - ≤ 400	> 400 - ≤ 1000	> 1000 - ≤ 2000	> 2000 - ≤ 4000												
± 0,2	± 0,3	± 0,5	± 0,8	± 1,2	± 2	± 3	± 4	LAU - ulit.											