Power Take Offs Relation 1 : 1,32	Ref. TF4002AMP
ZF	S5-50 ; S5-90 ; S6-65 ; S6-66 ; S6-70 ; S6-75 ; S6-80 ; S6-90 ; 6S-800 TO ; 6AS-800 TO ; 6S-1000 TO ; 6AS-1000 TO ; 6S-1200 TD/TO

To apply with Gear Pumps or with Piston Pumps

Main Dimensions

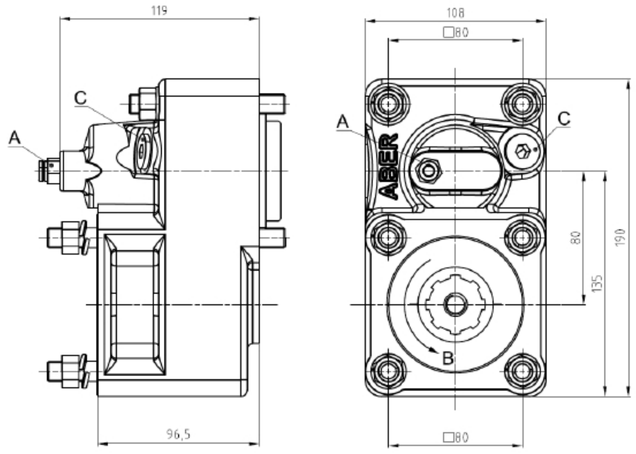

A – Air connection
B – Pump rotation
C – Option: Electric sensor with mechanical driving Ref. TF4002AMPS or TF4002AMPC

(Dimensions in mm)

Main Data	
Continuous Torque (Nm)	300
Intermittent Torque (Nm)	420
Power (at 1000 rpm)	42 cv / 32 kW
Mounting Position	Rear
Pump Rotation	Right Hand
Weight (kg)	7,5
PTO internal ratio	1:1,32

Indicative ratio from motor to PTO´s output

S5-50	/ 5.30	.- 1 : 0.861		
	/ 5.50	.- 1 : 0.811		
	/ 6.20	.- 1 : 0.719		
	/ 6.61	.- 1 : 0.674		
	/ 6.61+GV80 / 5.30	High: .- 1 : 0.842	Normal: .- 1 : 0.674	
	/ 8.02	.- 1 : 0.557		
	/ 8.02+GV80 / 6.20	High: .-1 : 0.719	Normal: .- 1 : 0.557	

CTI TF4002AMP 1506- 4

ABER is constantly engaged in improving its products and, therefore, reserves itself the right to modify without any further notice the characteristics shown
The gear boxes are in constant change; therefore, ABER is not to be held responsible for any damage resulting from wrong application or application of outdated material

ABER - Embraiagens e Comandos Hidráulicos - A. B. LDA
Rua Francisco de Almeida, Nº 30 – Vila Nova da Telha – 4470 MAIA - Portugal
Telefone: +351.22.9438070 Fax: +351.22.9420823 e-mail: aber@aber.pt http://www.aber.pt

Power Take Offs Relation 1 : 1,32	Ref. TF4002AMP
ZF	S5-50 ; S5-90 ; S6-65 ; S6-66 ; S6-70 ; S6-75 ; S6-80 ; S6-90 ; 6S-800 TO ; 6AS-800 TO ; 6S-1000 TO ; 6AS-1000 TO ; 6S-1200 TD/TO

Engine to PTO ratio

S5-90	GPA	.- 1 : 1.174		
S6-65	/ 6.37	.- 1 : 0.860		
	/ 6.70	.- 1 : 0.820		
	/ 7.00+GV70 / 7.67	High: .- 1 : 0.602	Normal: .- 1 : 0.482	
	/ 7.40	.- 1 : 0.741		
	/ 7.52	.- 1 : 0.732		
	/ 9.00	.- 1 : 0.610		
	/ 7.97+GV80 / 6.70	High: .- 1 : 0.819	Normal: .- 1 : 0.694	
	/ 9.00+GV80 / 6.70	High: .- 1 : 0.819	Normal: .- 1 : 0.611	
	/ 9.00+GV80 / 7.52	High: . -1 : 0.732	Normal: .- 1 : 0.611	
S6-66	/ 7.36-1.0	.- 1 : 0.690		
	/ 9.06-1.0	.- 1 : 0.550		
S6-70	/ 6.80	.- 1 : 0.679		
	/ 6.80+GV70 / 5.71	High: .- 1 : 0.808	Normal: .- 1 : 0.679	
	/ 7.36	.- 1 : 0.630		
	/ 7.92	.- 1 : 0.582		
	/ 9.03	.- 1 : 0.511		
	/ 9.59	.- 1 : 0.482		
S6-75	/ 6.70+GV80 / 7.52	Normal: .- 1 : 0.819	Low: .- 1 : 0.732	
S6-80	/ 5.03	.- 1 : 1.029		
	/ 5.66	.- 1 : 0.980		
	/ 5.66+GV80 / 7.52	High: .- 1 : 0.974	Normal: .- 1 : 0.733	
	/ 6.10	.- 1 : 0.908		
	/ 6.70	.- 1 : 0.820		
	/ 6.70+GV80 / 5.30	High: .- 1 : 1.039	Normal: .- 1 : 0.819	
	/ 6.90	.- 1 : 0.679		
	/ 7.35	.- 1 : 0.728		
	/ 7.41	.- 1 : 0.743		
	/ 7.53	.- 1 : 0.732		
	/ 7.67	.- 1 : 0.710		
	/ 7.67+GV80 / 6.70	High: .- 1 : 0.821	Normal: .- 1 : 0.716	
	/ 7.90	.- 1 : 0.693		
	/ 9.00	.- 1 : 0.610		
	/ 9.00+GV80 / 5.30	High: . -1 : 1.039	Normal: .- 1 : 0.611	
	/ 9.00+GV80 / 7.48	High: . -1 : 0.743	Normal: .- 1 : 0.611	
	/ 9.00+GV80 / 7.52	High: . -1 : 0.732	Normal: .- 1 : 0.611	
S6-90	/ 5.67	.- 1 : 0.990		
	/ 5.74	.- 1 : 0.980		
	/ 6.37	.- 1 : 0.980		
	/ 6.98	.- 1 : 0.807		
	/ 7.03	.- 1 : 0.796		
	/ 7.03+GV90 / 5.67	High: .- 1 : 0.989	Normal: .- 1 : 0.796	
	/ 7.03+GV90 / 5.74	High: .- 1 : 0.970	Normal: .- 1 : 0.790	
	/ 7.40	.- 1 : 0.759		
	/ 9.01	.- 1 : 0.620		
	/ 9.01+GV90 / 7.40	High: . -1 : 0.757	Normal: .- 1 : 0.622	
6S-800 TO	/6.58-0.78	-.1 : 0.700		
6AS-800 TO	/6.58-0.78	-.1 : 0.700		
6S-1000 TO	/6.75-0.78	-.1 : 0.700		
6AS-1000 TO	/6.75-0.78	-.1 : 0.700		
6S-1200 TD	/7.72-1.00	-.1 : 0.713		
6S-1200 TO	/6.75-0.83	-.1 : 0.818		

CTI TF4002AMP 1506- 4

ABER is constantly engaged in improving its products and, therefore, reserves itself the right to modify without any further notice the characteristics shown
The gear boxes are in constant change; therefore, ABER is not to be held responsible for any damage resulting from wrong application or application of outdated material

ABER - Embraiagens e Comandos Hidráulicos - A. B. LDA
Rua Francisco de Almeida, Nº 30 – Vila Nova da Telha – 4470 MAIA - Portugal
Telefone: +351.22.9438070 Fax: +351.22.9420823 e-mail: aber@aber.pt http://www.aber.pt