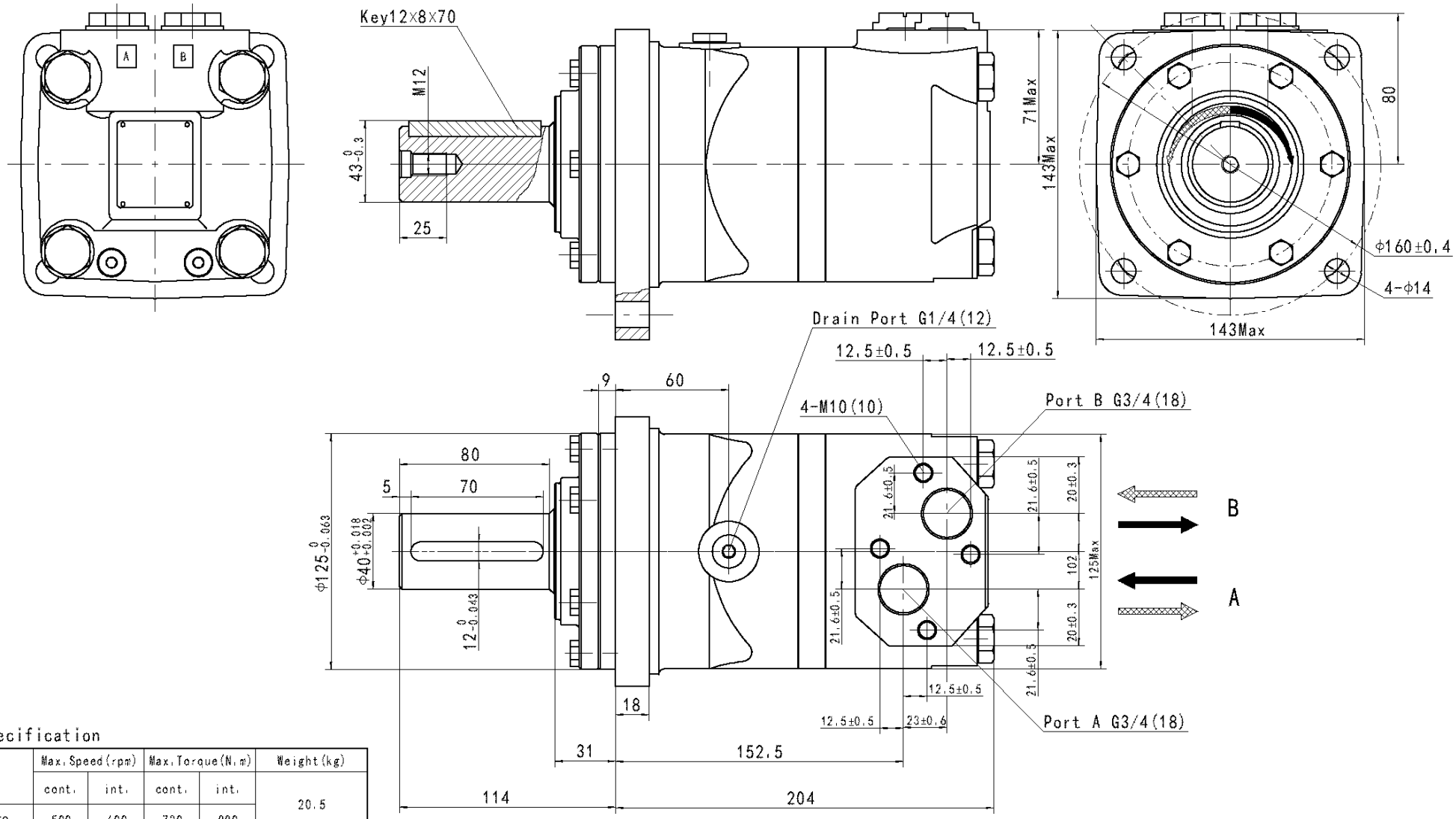

Main Specification

MODEL	Max.Speed(rpm)		Max.Torque(N.m)		Weight(kg)
	cont.	int.	cont.	int.	
JMT-250	500	600	730	880	20.5
Geometric Displacement cm^3/rev.	Max.Flow(L/min)		Max.Pressure(Mpa)		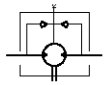
	cont.	int.	cont.	int.	
251.8	125	150	20	24	

Direction of shaft rotation: Standard

When facing shaft end of motor, shaft to rotate:

Clockwise when port "A" is pressurized.

Counter-clockwise when port "B" is pressurized.

Painted: Code "B" -Black.

ID phase	Weight	Scale	Hydrodrive Ltd.
S A B			JMT-250
Total page	Page		HYDRODRIVE HYDRAULIC COMPONENTS